ASIC/1 Digital Display

WS-051 Application

This application bulletin describes the operation of a WS-051 Digital Display that can be used to change the Occupied Cooling and Heating Temperature setpoints within a limited range with the ASIC/1-8800, ASIC/1-6000 VAV, ASIC/1-8055 VAV, and ASIC/1-8655 Unitary controllers. The Digital Display has a zone temperature sensor that is read by the ASIC/1 controller.

The Digital Display is connected to the ASIC/1-8800, ASIC/1-8055, ASIC/1-6000 or ASIC/1-8655 using the standard SCP-0xx wall sensor cable. The Digital display also has a 6-pin connector so that the user can talk to the controller through a SINC/1-1030 Portable Mini-SINC.

The Digital Display is only active if Digital Display Enable is yes. When Digital Display Enable is yes, the ASIC/1 communicates with the digital display on a second RS-485 communication port. The Digital Display configuration is only supported by ASI Expert software.

If User Adjust Enable is yes, the WS-051 can be used to change the Occupied Cooling and Heating Temperature setpoints. If Single Setpoint Enable is yes, then single setpoint adjustment is supported where the Occupied Cooling Temperature Setpoint is changed and the Occupied Heating Temperature Setpoint is set 2 degrees lower.

If Afterhours Enable is yes, the WS-051 can be used to start afterhours operation.

If Half Degree Enable is yes, then the temperature setpoints are maintained in 0.5 deg increments in the controller.

If the Input 1 Type is Zone Temp deg C, then the temperature reading and setpoints are in Celsius units. If the Input 1 Type is Zone Temp deg F, then the temperature reading and setpoints are in Fahrenheit units.

The ASIC/1-8800 and ASIC/1-6000 requires a moving and connecting jumper, JMP1, to provide power through a polyswitch.

The ASIC/1-8655 requires replacing the Input 2 pull-up resistor with a 1/8 A pico-fuse to provide power.

The ASIC/1s support separate minimum and maximum limits for the Heating and Cooling Temperature Setpoints, and single setpoint adjustment.

The ASIC/1-8055 requires a modification to add a second RS-485 chip in U1 and to replace the Input 2 pull-up resistor with a 1/8 A pico-fuse to provide power. The Digital Display will not work if Fan Speed is enabled. The ASIC/1-8055 supports only a single minimum and maximum limits for the Heating and Cooling Temperature Setpoints, and does not support single setpoint adjustment.

Default Operation

If Digital Display Enable is yes, the Digital display shows the temperature of the thermistor on the digital display that is read by the controller. The numerical value ###.# is rounded and displayed to the nearest 0.1 deg. The Digital Display shows "^{o}F", or " ^{o}C" depending on the configuration of the zone temperature input.

If the Active Control Mode is Heating, then the Heat icon is displayed. If the Active Control Mode is Cooling, then the Cool icon is displayed. If the Active Control Mode is Deadband, then the Heat and Cool icons are NOT displayed.

If the Active Control State is Occupied or Morning Ready, then the Day icon is displayed. If the Active Control State is Unoccupied, then the Day icon is off. If the Active Control State is Night Setback, then the Night icon is displayed.

If the personality is Constant or Intermittent Fan and the Fan is ON, then the Fan icon is displayed. Otherwise it is not.

User Adjust Operation

If User Adjust Enable is yes, the Occupied Cooling and Heating Temp Setpoints are incremented or decremented independently by one count when the Up or Down key is pressed. The Cooling Temperature Setpoint is limited by the CLG Temperature Upper Limit and the CLG Temperature Lower Limit. . The Heating Temperature Setpoint is limited by the HTG Temperature Upper Limit and the HTG Temperature Lower Limit. A minimum two count Deadband is maintained between the Cooling and Heating Temperature Setpoints. IF Single Setpoint Enable is set then only a single Setpoint is adjusted.

Occupied Cooling Temperature Setpoint

If Digital Display Enable is yes and User Adjust Enable is yes, pressing the Mode key brings up User Adjust Operation for Occupied Cooling Temperature Setpoint and the Setpoint and Cooling icons are displayed. If Half Degree Enable is yes, then the temperature setpoints are maintained in 0.5 deg increments. The numeric display shows the Occupied Cooling Temperature Setpoint.

If the Occupied Cooling Temp SP is greater than or equal to CLG Temperature Upper Limit then pressing the Up key does nothing. Otherwise pressing the Up key increments the Occupied Cooling Temp SP by one count and displays the updated Occupied Cooling Temperature Setpoint.

Pressing the Down key decreases the Occupied Cooling Temp SP by one count and decrements the OCC Heating SP as needed to maintain a minimum 2 count separation from the OCC Heating SP. If the Occupied Cooling Temp SP is less than or equal CLG Temperature Lower Limit Temp SP, then pressing the Down key does nothing.

Occupied Heating Temperature Setpoint

Pressing the O/R Key while in User Adjust Operation toggles to the Occupied Heating Temp SP (or back to the Occupied Cooling Temp SP).

If the Occupied Heating Temp SP is less than HTG Temp Lower Limit then pressing the Down key does nothing. Otherwise pressing the Down key decrements the Occupied Heating Temp SP by one count and displays the updated Occupied Heating Temperature SP.

Pressing the Up key increases the Occupied Heating Temp SP by one count and increments the OCC Cooling SP as needed to maintain a minimum 2 count separation from the OCC Heating SP.

If the Occupied Heating Temp SP greater or equal to HTG Temp Upper Limit SP, then pressing the Up key does nothing.

Saving Setpoints

Pressing the mode key, or if no key is pressed for 30 sec, updates the Occupied Cooling and Heating Temperature Setpoints in the controller and returns to the Default Operation.

Single Setpoint Adjustment

Single setpoint adjustment is supported in FW600a1.3 and FW655a2.0 and later. If Single Setpoint Enable is yes, the Occupied Cooling Temperature Setpoint is changed and the Occupied Heating Temperature Setpoint is set 2 degrees lower. The Occupied Cooling Temperature Setpoint is kept within the cooling maximum and minimum limits.

With FW880a1.0, FW600a1.8 and FW655a2.1 Occupied Heating Temperature Setpoint is set to the Occupied Cooling Temperature Setpoint minus the Single Setpoint Deadband.

With FW880a1.1 FW600a2.0 and FW655a2.4 the average of the Occupied Cooling and Heating Setpoints is displayed.

Override Operation

If Afterhours Enable is yes, then pressing the override key from Default operation triggers the “As If Pushed” action, as if the pushbutton was pressed on the WS-0xx wall sensor.

If the Active Control State is Unoccupied, or Night Setback, it triggers Afterhours operation. If the Afterhours Request is yes, the clock icon is displayed. When the controller is in the occupied state because of the Afterhours Request, the clock icon is shown on the display.

If the active control state is Occupied or Morning Ready it has the effect of toggling the Lights.

Wiring Layout

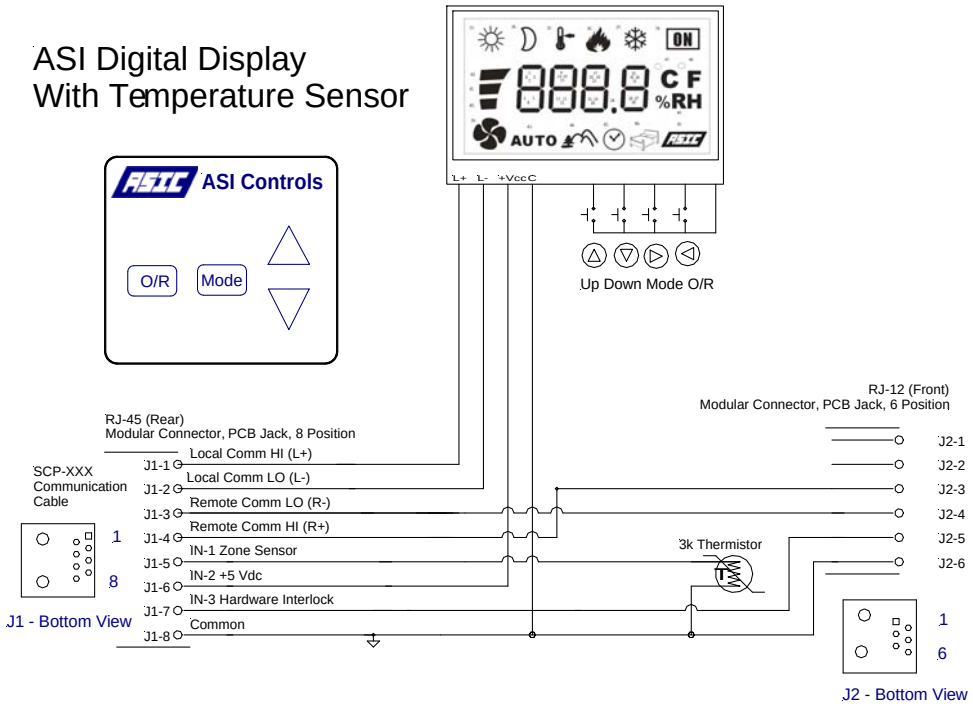

Digital Display Versions

ASIC/1-8800 FW880a

ASIC/1-8800 FW880a Rev 1.1 2009-05-19
WS-051 Single Setpoint change now displays average of HTG/CLG Temp SP and displays HTG, CLG and Setpoint Icons..

ASIC/1-8800 FW880a Rev 1.0g 2009-04-10
Adds Single Setpoint Deadband parameter to Single Setpoint feature

ASIC/1-6000 FW600a

ASIC/1-6000 FW600a Rev 2.0x 2009-05-19
WS-051 Single Setpoint change now displays average of HTG/CLG Temp SP and displays HTG, CLG and Setpoint Icons..

ASIC/1-6000 FW600a Rev 1.8z 2008-11-19
Adds Single Setpoint Deadband parameter to Single Setpoint feature

ASIC/1-6000 FW600a Rev 1.3 2007-01-04
Adds Single Setpoint Enable T6E5bit0 feature for WS-051 Digital Display
If enabled, then the CLG OCC Temp Setpoint is changed and the
HTG OCC Temp Setpoint is 2 degrees less.

ASIC/1-6000 FW600a Rev 1.0 2005-07-22
Implemented as in 655a

ASIC/1-8655 FW655a

ASIC/1-8655 FW655A Rev 2.4d 2009-05-20
WS-051 Single Setpoint change now displays average of HTG/CLG Temp SP and displays HTG, CLG and Setpoint Icons..

ASIC/1-8655 FW655A Rev 2.1 2008-04-21
Adds Single Setpoint Deadband parameter to Single Setpoint feature

ASIC/1-8655 FW655A Rev 2.0 2007-01-04
Adds Single Setpoint Enable feature for If enabled, then the CLG OCC Temp Setpoint is changed and the HTG OCC Temp Setpoint is 2 degrees less.

ASIC/1-8055 FW155b

ASIC/1-8055 FW155B Rev 3.0 2005-07-26
Update for use with new ADC Chip U17 and new EE chip U14.
Supports WS-051

ASIC/1-8055 FW155B Rev 2.0 2002-07-01
Update for use with new EE chip U14.

ASIC/1-8055 FW155B Rev 1.1 2002-03-01
Revise operation of Digital Display for separate OCC CLG and HTG Temp SP
Force 2 count deadband between OCC CLG and HTG Temp SP

ASIC/1-8055 FW155B Rev 1.0 2002-02-01
Adds Half Deg Enable for 0.5 deg temperature setpoints.
Adds Digital Display Enable for Digital Display support to allow change of Occupied CLG/HTG Temp SP from Digital Display. The display shows the average of OCC HTG and CLG Temp SP The deadband between OCC HTG and CLG Temp SP remains constant.