Packaged Air Conditioner

Application

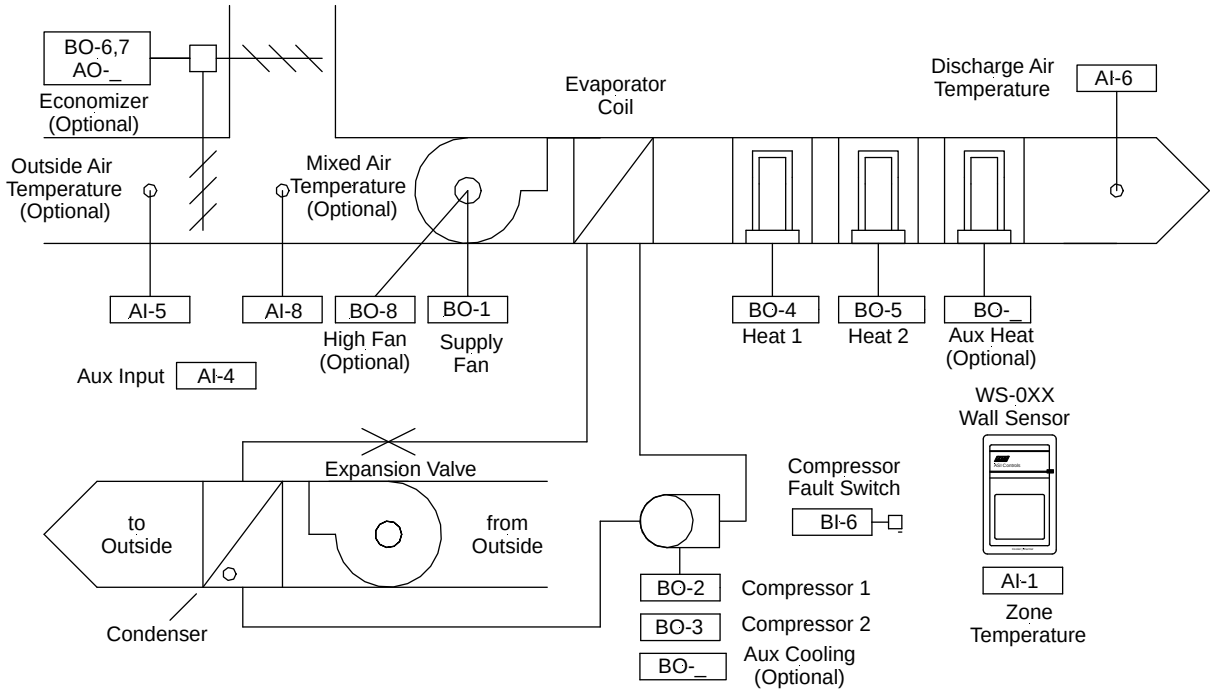

s_rt2ac.skf 04/18/2002

The ASIC/1-8655 Packaged Air Conditioning Unit controller has 8 air conditioner personalities to control up to two stages of heating and four stages of cooling based on Zone Temperature :

Personality 1, 1 Stage Air Conditioner with 1 Stage Heating
Personality 2, 1 Stage Air Conditioner with 2 Stage Heating
Personality 3, 2 Stage Air Conditioner with 1 Stage Heating
Personality 4, 2 Stage Air Conditioner with 2 Stage Heating
Personality 9, 3 Stage Air Conditioner with 1 Stage Heating
Personality 10, 3 Stage Air Conditioner with 2 Stage Heating
Personality 11, 4 Stage Air Conditioner with 1 Stage Heating
Personality 12, 4 Stage Air Conditioner with 2 Stage Heating

Optionally, an economizer may be controlled on outside air temperature. Discharge Air Temperature Low Limit control may also be implemented.

Output Assignments (AC)

		BO-1	BO-2	BO-3	BO-4	BO-5*	BO-6*	BO-7*	BO-8*
1	1 CLG,1 HTG	SFAN	Comp 1	-	Heat 1				
2	1 CLG,2 HTG	SFAN	Comp 1	-	Heat 1	Heat 2*			
2	1 CLG,2 HTG, AuxHTG	SFAN	Comp 1	-	Heat 1	Heat 2*	AuxHTG*		
3	2 CLG,1 HTG	SFAN	Comp 1	Comp 2	Heat 1				
3	2 CLG, 1 HTG, AuxCLG	SFAN	Comp 1	Comp 2	Heat 1	AuxCLG*			
4	2 CLG,2 HTG	SFAN	Comp 1	Comp 2	Heat 1	Heat 2*			
9	3 CLG,1 HTG	SFAN	Comp 1	Comp 2	Heat 1	Heat 2*	Comp 3*		
10	3 CLG,2 HTG	SFAN	Comp 1	Comp 2	Heat 1	Heat 2*	Comp 3*		
11	4 CLG,1 HTG	SFAN	Comp 1	Comp 2	Heat 1	Heat 2*	Comp 3*	Comp 4*	
12	4 CLG,2 HTG	SFAN	Comp 1	Comp 2	Heat 1	Heat 2*	Comp 3*	Comp 4*	

*User Assignable Outputs.

Personality 1 or 2, 1 AC with 1 HTG or 2 HTG

Single Stage Air Conditioner. In Cooling mode Compressor 1 is on a fraction of the Compressor Duty Cycle Time based on the Cooling Requirement. For 1 Stage sequences the Compressor 1 On Time is 0 to 100% as the Cooling Requirement goes from 0 to 100% .

For Personality 1, Single Stage Heating. In Heating Mode Heat 1 is on a fraction of the Heating Base Time based on Heating Requirement. The Heat 1 On Time is 0 to 100% as the Heating Requirement goes from 0 to 100%

For Personality 2, Two Stage Heating. In Heating Mode Heat 1 and 2 are on a fraction of the Heating Base Time based on Heating Requirement. The Heat 1 On Time is 0 to 100% as the Heating Requirement goes from 0 to 50%. The Heat 2 On Time is 0 to 100% as the Heating Requirement goes from 50 to 100%

Personality 3 or 4, 2 AC with 1 HTG or 2 HTG

Two Stage Air Conditioner. In Cooling mode Compressor 1 and 2 are on a fraction of the Compressor Duty Cycle Time based on Cooling Requirement. The Compressor 1 On Time is 0 to 100% as the Cooling Requirement goes from 0 to 50%. The Compressor 2 On Time is 0 to 100% as the Cooling Requirement goes from 50 to 100%

For Personality 3, Single Stage Heating. In Heating Mode Heat 1 is on a fraction of the Heating Base Time based on Heating Requirement. The Heat 1 On Time is 0 to 100% as the Heating Requirement goes from 0 to 100%

For Personality 4, Two Stage Heating. In Heating Mode Heat 1 and 2 are on a fraction of the Heating Base Time based on Heating Requirement. The Heat 1 On Time is 0 to 100% as the Heating Requirement goes from 0 to 50%. The Heat 2 On Time is 0 to 100% as the Heating Requirement goes from 50 to 100%

Personality 9 or 10, 3 AC with 1 HTG or 2 HTG

Three Stage Air Conditioner. In Cooling mode Compressor 1, 2 and 3 are on a fraction of the Compressor Duty Cycle Time based on Cooling Requirement. The Compressor 1 On Time is 0 to 100% as the Cooling Requirement goes from 0 to 33%. . The Compressor 2 On Time is 0 to 100% as the Cooling Requirement goes from 33 to 66%. The Compressor 3 On Time is 0 to 100% as the Cooling Requirement goes from 66 to 100%

For Personality 9, Single Stage Heating. In Heating Mode Heat 1 is on a fraction of the Heating Base Time based on Heating Requirement. The Heat 1 On Time is 0 to 100% as the Heating Requirement goes from 0 to 100%

For Personality 10, Two Stage Heating. In Heating Mode Heat 1 and 2 are on a fraction of the Heating Base Time based on Heating Requirement. The Heat 1 On Time is 0 to 100% as the Heating Requirement goes from 0 to 50%. The Heat 2 On Time is 0 to 100% as the Heating Requirement goes from 50 to 100%

Personality 11 or 12, 4 AC with 1 HTG or 2 HTG

Four Stage Air Conditioner. In Cooling mode Compressor 1, 2, 3 and 4 are on a fraction of the Compressor Duty Cycle Time based on Cooling Requirement. The Compressor 1 On Time is 0 to 100% as the Cooling Requirement goes from 0 to 25%. The Compressor 2 On Time is 0 to 100% as the Cooling Requirement goes from 25 to 50%. The Compressor 3 On Time is 0 to 100% as the Cooling Requirement goes from 50 to 75%. The Compressor 3 On Time is 0 to 100% as the Cooling Requirement goes from 75 to 100%

For Personality 11, Single Stage Heating. In Heating Mode Heat 1 is on a fraction of the Heating Base Time based on Heating Requirement. The Heat 1 On Time is 0 to 100% as the Heating Requirement goes from 0 to 100%

For Personality 12, Two Stage Heating. In Heating Mode Heat 1 and 2 are on a fraction of the Heating Base Time based on Heating Requirement. The Heat 1 On Time is 0 to 100% as the Heating Requirement goes from 0 to 50%. The Heat 2 On Time is 0 to 100% as the Heating Requirement goes from 50 to 100%

Inputs

The ASIC/1-8655 controller modulates the heating or cooling based on the Zone temperature. It has specific inputs for zone temperature, optional water loop temperature, optional discharge air temperature, optional outdoor air temperature, and optional occupancy sensor. The standard input types are set at the factory. Inputs that are not required for the sequence may be used for monitoring, and may be scaled to read various analog sensors.

TB-4 Analog Inputs 0- 5 Vdc

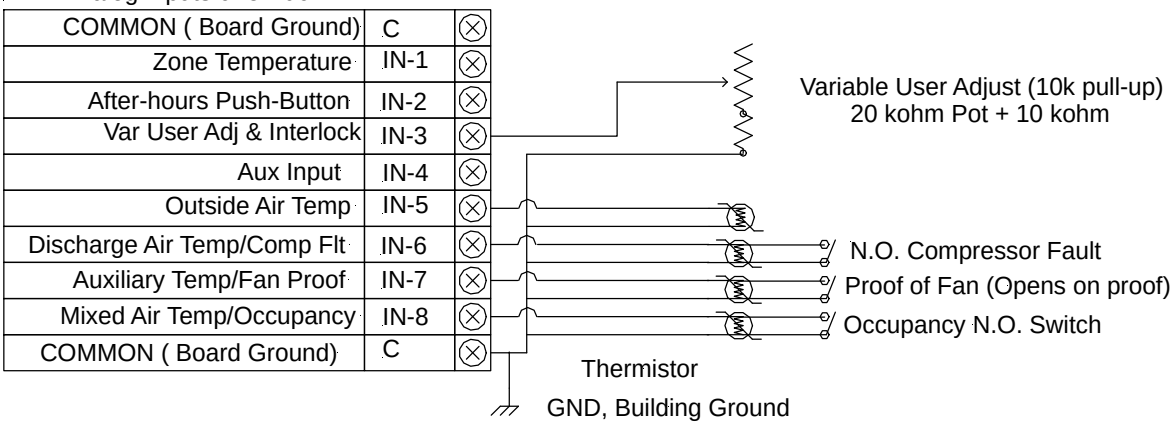

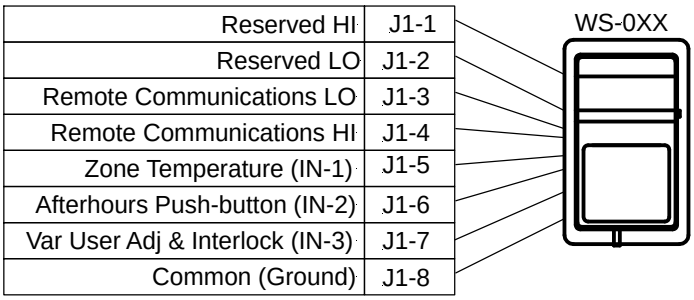

Remote Communications HI (+)	TB6-1	⊗
Remote Communications LO (-)	TB6-2	⊗
Sheld Common (Ground)	TB6-3	⊗

w_8655InputAC.skd 2003-12-02

Wall Sensor Connections

The ASIC/1-8655 works with the WS-0xx family of wall sensors, including the WS-051 Digital Display. Zone temperature sensor is on input 1. Typically, the WS-0XX wall sensor is connected to the controller using a SCP-XXX sensor cable. Alternately, a zone or return air temperature sensor may be attached on the screw terminal input , IN1, and input common, COM.

> Note: If there is no zone temperature sensor, then the zone sensor input is in fault, all outputs are off, and it does not try to control.

The afterhours push-button on the analog WS-0XX wall sensors, if used, is always on input 2. If Afterhours Enable is Yes, then shorting the input to zero will initiate afterhours override mode for an Afterhours Time Allowed.

Input 3 is used for Interlock and is also used for variable user adjust with the WS-0XX wall sensor. When User Adjust Enable is Yes and input 3 is configured for Variable User adjust, 10 to 30 kohm, the zone temperature setpoint may be adjusted up or down by the User Adjust Setpoint, based on the condition of input 3. Note: When the interlock is in place the User Adjust does not read.

The controller can work in degrees Celsius or Fahrenheit. The ASIC/1-8655 includes the option for Zone Temperature control in 0.5 degrees Celsius or Fahrenheit. If Half Degree Enable is Yes, the Occupied, Night Setback, and Unoccupied Cooling and Heating Temperature setpoints and User Adjust Setpoint are used in 0.5 degree increments. The single byte Zone Temperature is also reported in half degrees.

The Digital Display Wall Sensor is a simple user interface. The default display presents the zone temperature in degrees Celsius (Deg C) or Fahrenheit (Deg F) and allows the adjustment of Occupied Cooling and Heating Temperature Setpoints.. Additionally, the user is allowed to override the system from unoccupied to occupied mode utilizing the controller's built-in afterhours logic. The Digital display also supports half degrees if enabled in the controller. To use the WS-051 Digital Display wall sensor with the ASIC/1-8655 you must replace the pull-up resistor, R2, with a 1/8 A pico-fuse, and configure Digital Display Enable to "Yes".

Discharge Air Temperature

An optional Discharge Air Temperature sensor, TS-D (duct), may be placed on input 6, for temperature monitoring or optional discharge air temperature control. The temperature sensor uses the factory provided 1.82-kohm pull-up resistor, R6. If the discharge air temperature falls below the DAT Low Limit SP, then a low DAT alarm is set. If the discharge air temperature rises above the DAT High Limit SP, then a High DAT alarm is set. Control action for DAT Alarms is discussed under Alarms below.

Compressor Fault Switch

An optional Normally Open Compressor Fault switch may be placed across the Discharge air sensor on input 6. Optionally, if any fault occurs in the compressor, the switch will close and the unit will shut down. Up to 3 restarts may be attempted after a restart delay. Control action for Compressor Fault and Lockout Alarms is discussed under Alarms below.

Auxiliary Temperature

An optional Auxiliary Temperature sensor or other sensor may be connected to input 7 . The temperature sensor uses the factory provided 1.82-kohm pull-up resistor, R7.

Proof of Fan Switch

An Optional Proof of Fan Switch may be across Input 7 (Water loop) which opens on proof of fan. If Proof of Fan Enable is Yes, the switch is examined whenever the fan, or high fan is on, or in Heating when Gas Heat Enable is Yes. The Proof of Fan Switch is for information only. No actions result from proof of fan alarm. It is also examined whenever the fan is off. (FW655A1.5)

Outdoor Air Temperature

An optional Outdoor Air Temperature sensor, TS-O, may be placed on input 5. The outdoor sensor can provide for temperature monitoring, economizer control, and optional OAT Heating or Cooling Lockout control. The temperature sensor uses the factory provided 1.82-kohm pull-up resistor, R5.

Mixed Air/Aux Temperature

A Mixed Air Temperature sensor may be placed on input 8 for Mixed Air Economizer control. The temperature sensor uses the factory provided 1.82-kohm pull-up resistor, R8. When a two-position occupancy switch is used in combination with a temperature sensor, then the temperature sensor is not read when the contacts are closed.

Occupancy Sensor

An optional occupancy sensor, or two-position switch from an occupancy sensing device may be used on input 8 to change the control state from occupied to unoccupied. The use of the occupancy sensor is discussed in APB-311, ASIC/1 Occupancy Sensor.

Auxiliary Inputs

Input 4 and any other unused inputs are available for monitoring of temperature, humidity, Amperage or other voltage transducer. The 3-kohm thermistor temperature sensor uses the factory provided 1.82 kohm pull-up resistor, R4. Active sensors with outputs in the 0 to 5 Vdc range do not require a pull-up resistor and may be read as raw inputs. Inputs 4 through 8 can be custom scaled for a variety of sensors.

Control Mode

The controller determines the Control Mode, Heating, Deadband, or Cooling by comparing the zone temperature to the Active Heating Temperature Setpoint and Active Cooling Temperature Setpoint.

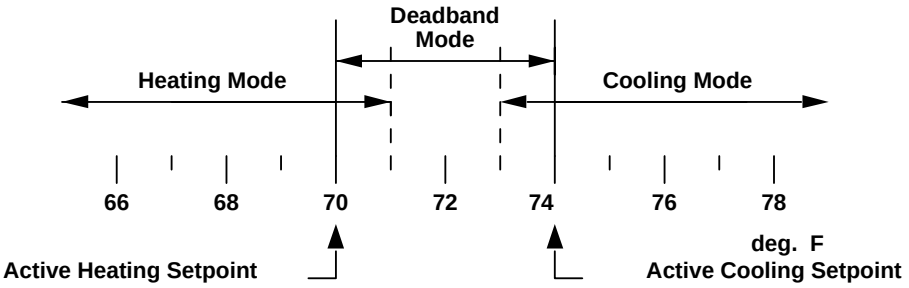

The controller enters the Cooling Control Mode when the zone temperature equals or is greater than the Active Cooling Temperature Setpoint. The control reenters the Deadband mode, when the zone temperature is 1 degree below the Active Cooling Temperature Setpoint and the calculated Cooling Requirement is equal to zero.

The control enters the heating mode when the zone temperature is equal to or less than the Active Heating Temperature Setpoint. The control reenters the Deadband mode when the zone temperature is 1 degree greater than the Active Heating Temperature Setpoint and the calculated Heating Requirement is equal to zero. The controller can work in either Fahrenheit or Celsius depending on the configuration of the Zone Temperature sensor. If Half Degree Enable is Yes, then the overlap is 0.5 degree.

Active Temperature Setpoints

The controller maintains the zone temperature between Active Cooling and Heating Temperature Setpoints. The Active Cooling and Heating Temperature Setpoints are based on Control State, the Active User Adjust based on the position of the Variable User Adjust, and the Active Demand Limit Reset.

If User Adjust Enable is Yes, the Active Temperature Setpoints are modified by the variable user adjust potentiometer on a WS-0XX wall sensor depending on the input configuration. The Active Cooling and Heating Temperature Setpoints are adjusted up or down a fraction of the User Adjust Setpoint depending on the potentiometer setting..

If the Active Demand Level is non-zero, the Active Temperature Setpoints are also modified by a fraction of the Demand Reset Range [Default 6] as the Active Demand Level goes from 0 to 6. The Active Cooling Temperature Setpoint is reset upwards and the Active Heating Temperature Setpoint is reset downwards.

Cooling and Heating Requirement

In Deadband Control Mode, the Heating and Cooling Requirements are zero.

In the Cooling or Heating Control Mode, the Cooling or Heating Requirement is calculated using a PI control loop.

The change in heating or cooling requirement is calculated every 30 seconds.

In heating: Error = Active HTG SP - Zone Temp
Δ Error = Previous Zone Temp - Zone Temp

or in cooling: Error = Zone Temp - Active CLG SP
Δ Error = Zone Temp - Previous Zone Temp.

ΔRequirement = (100%/ThrottleRange)*[Error*(CalcTime/Int Time) +Δ Error]

The factory setting for throttle range is 4.0 degrees, and for integral time is 2.5 minutes.

Cooling Mode

When in Cooling control mode, the controller energizes the available compressor stages for a fraction of the Compressor Duty Cycle Time based on the Cooling Requirement. The operation of the cooling outputs is discussed in more detail below.

Deadband Mode

When in Deadband Control mode, the controller turns off the compressors and available heat stages.

Heating Mode

When in Heating control mode, the controller energizes the available heating stages for a fraction of the Heat Base Time based on the Heating Requirement. The operation of the heating outputs is discussed in more detail below.

On-Off Thermostat Enable

An optional On-Off Thermostat Enable can be used to control like a proportional thermostat. The temperature control is based on the offset from the Active Temperature Control Setpoint. When the offset is equal to the Throttle Range , then the heating or cooling requirement is 100%.

In Deadband Control Mode, the Heating and Cooling Requirements are zero.

In the Cooling or Heating Control Mode, the Cooling or Heating Requirement is calculated as follows:

For one stage heating or cooling the heating or cooling requirement is 100%, when the offset is equal to the throttling range and goes to zero when the controller enters Deadband.

For two stages heating or cooling the heating or cooling requirement is 50%, when the offset is equal to one-half the throttling range and goes to zero when the controller enters Deadband. For two stage heating or cooling the heating or cooling requirement is 100%, when the offset is equal to the throttling range and returns to 50% when the offset is zero.

For three stages cooling the cooling requirement is 33%, when the offset is equal to one-third the throttling range and goes to zero when the controller enters Deadband. The cooling requrement is 66% when the offset is equal to two thirds of the throttling range and goes to 33% when the offset is equal to one third. The cooling requirement is 100%, when the offset is equal to the throttling range and returns to 66% when the offset is two thirds.

For four stages cooling the cooling requirement is 25%, when the offset is equal to one-third the throttling range and goes to zero when the controller enters Deadband. The cooling requrement is 50% when the offset is equal to two quarters of the throttling range and goes to 25% when the offset is equal to one quarters. The cooling requrement is 75% when the offset is equal to three quarters of the throttling range and goes to 50% when the offset is equal to two quarters. The cooling requirement is 100%, when the offset is equal to the throttling range and returns to 75% when the offset is three quarters.

Control State

The Control State determines which Cooling and Heating Temperature Setpoints are used for zone temperature control. Four control states are possible: Occupied, Unoccupied, Night Setback, and Morning Ready. If the Clock is not synchronized, the Control State is Occupied by default. Otherwise the Control State is determined by the Daily Event Schedule unless this has been disabled.

The Control State may be overridden via a message broadcast over the communication bus from software or an ASIC/2 or SINC/3 controller. The Control State may be returned to OCC from NSB or Unoccupied, when the Afterhours Enable is Yes and the push-button on the Wall Sensor is pushed. An Occupancy Sensor or two-position switch on input 8 may also override the Controller State to Unoccupied from Occupied.

Morning Ready (MRDY) State

Morning Ready is meant as a prelude to Occupied state, to ready the building for daily use. For Morning Ready, the control sequence operates at full-capacity heating or cooling until the zone temperature is moved into the Deadband region. The Occupied Temperature Setpoints are used in Morning Ready.

Fan Outputs

Fan Output

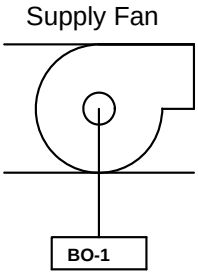

The ASIC/1-8655 has On/Off fan control. The fan is ON whenever there is a call for heating or cooling. In Deadband the fan follows the appropriate state of Intermittent Fan Enable. The Fan is always BO-1.

If Intermittent Fan Enable is Yes in Occupied, or if NSB Intermittent Fan Enable, UNOC Intermittent Fan Enable, or MRDY Intermittent Fan Enable is Yes, then the Fan turns OFF in Deadband after a Fan Wait Time in the respective control states.

If Intermittent Fan Enable is No in Occupied or if NSB Intermittent Fan Enable, UNOC Intermittent Fan Enable, or MRDY Intermittent Fan Enable is No, then Fan is always ON in Deadband in the respective control states.

Gas Heat Option

For Air Conditioner personalities with the gas heat, if Gas Heat Enable is Yes, the Fan Output does not come on in the heating mode. If the Fan is on when entering heating ,it is turned off.

Fan Start Delay

On Reset of Power and change of Control State the Fan waits a Fan Start Delay before turning on, so that multiple controllers do not all start at exactly the same time. The Fan Start Delay can be set for each controller For Constant Fan this delays the initial start after reset or schedule change. The Intermittent Fan does not start until controller leaves the Deadband mode which is typically more than 30 seconds after reset or schedule change and the Fan Start Delay should be greater than 30 seconds.

Heat Fan Delay

To prevent blowing cold air during heating , if Heat Fan Delay Enable is Yes mode, the Intermittent Fan does not come on in heating until Heating Requirement > 0. Fan stays on as heat duty cycles in heating mode.

Proof of Fan

A Proof of Fan Switch across Input 7 (Water loop) Opens on proof of fan. If Proof of Fan Enable is Yes, the switch is examined whenever the fan, or high fan is on, or in Heating with Gas Heat Enable set to Yes. The Proof of Fan Switch is for information only. No actions result from proof of fan alarm.

A Proof of Fan Status is set when proof of fan is established. Proof of Fan Alarm, (Alarm 5 HI) is set when proof of fan fails to be detected after a Proof of Fan Delay, [10s] on start, or if Proof of Fan is lost for a Proof of Fan Delay.

Demand Limit

If Shed Fan Enable is Yes, then the low and high fans are shed when the Active Demand Level equals or exceeds the Demand Shed Level, or the Demand Rotate Level for the matching Demand Group. The compressor is interlocked to the fan so that the compressor will turn off, if the fan turns off.

High Speed Fan Option

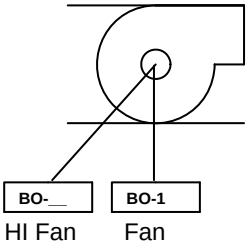

The ASIC/1-8655 has On/Off High Fan control. The high-speed fan may be enabled for cooling mode or heating mode or both. If enabled, and if the zone temperature deviates from the active control setpoint by the High Fan Temperature Offset for at least the High Fan Delay Time, then the high-speed fan output replaces the low-speed fan. When in operation, the high-speed fan behaves identically to the low-speed fan. Control is switched back to the low-speed fan when zone temperature has returned to the active control setpoint for High Fan Delay Time.

In switching between High and Low speeds the output goes off for 1 second before contact. The High Fan Mask must be assigned to the proper output.

Options are provided for Low Speed Only, switching between High and Low, and High Speed Only for both Heating and Cooling Modes based on the status of High Fan Enable and High Fan Only Enable. For modes where the fan runs in Deadband, the selection of High or Low Fan in Deadband depends on whether it was entered from Heating or Cooling.

High Fan Enable	High Fan Only Enable	Selection
No	No	Low Speed Only
Yes	No	Switch High & Low
No	Yes	High Speed Only
Yes	Yes	High Speed Only

Cooling Outputs

The Air Conditioning personalities provide cooling by energizing one or two compressor stages. An Auxiliary Cooling output can be used to bring on additional cooling if the Zone Temperature Cooling Setpoint can not be maintained.

Compressor 1 Output

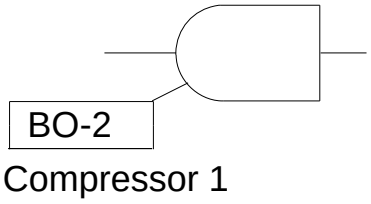

The Compressor 1 Output is always BO-2. Compressor 1 is on a fraction of the Compressor Duty Cycle Time based on the Cooling Requirement. The operation of Compressor 1 is interlocked to the fan being on. Compressor 1 has a Compressor Minimum On Time and a Minimum Off Time

If the Compressor Fault alarm appears, the Compressor 1 is turned off immediately, and does not restart until the Minimum Off time elapses.

.

Compressor 2 Output

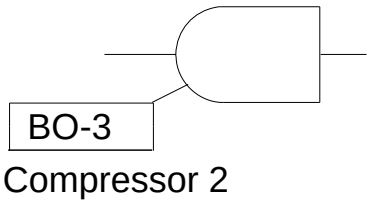

The Compressor 2 Output is always BO-3. Compressor 2 is on a fraction of the Compressor Duty Cycle Time based on the Cooling Requirement

The operation of Compressor 2 is interlocked to the fan and Compressor 1 being on. Compressor 2 has a Compressor Minimum On Time and a Minimum Off Time.

.If the Compressor Fault alarm appears, the Compressor 2 is turned off immediately, and does not restart until the Minimum Off time elapses.

Compressor 3 Output

The Compressor 3 Output to be controlled is identified by the Compressor 3 Output Mask, which is typically on Output-6. Compressor 3 is on a fraction of the Compressor Duty Cycle Time based on the Cooling Requirement (Personalities 9, 10, 11 & 12)

The operation of Compressor 2 is interlocked to the fan and Compressor 2 being on. Compressor 3 has a Compressor Minimum On Time and a Minimum Off Time.

.If the Compressor Fault alarm appears, the Compressor 3 is turned off immediately, and does not restart until the Minimum Off time elapses.

Compressor 4 Output

The Compressor 4 Output to be controlled is identified by the Compressor 3 Output Mask, which is typically on Output-7. Compressor 4 is on a fraction of the Compressor Duty Cycle Time based on the Cooling Requirement (Personalities 11 & 12)

The operation of Compressor 4 is interlocked to the fan and Compressor 3 being on. Compressor 3 has a Compressor Minimum On Time and a Minimum Off Time.

.If the Compressor Fault alarm appears, the Compressor 4 is turned off immediately, and does not restart until the Minimum Off time elapses.

Auxiliary Cooling Output (Optional)

An optional auxiliary cooling output is provided. If Auxiliary Cooling Enable is Yes in the Cooling Mode, and the Cooling Requirement is 100 % and the zone temperature exceeds the active cooling setpoint by an Auxiliary Temperature Offset [Default 2 ^{o}F] for a Auxiliary Delay Time [Default: 120 s], then an auxiliary cooling output is energized. The output to be controlled is identified by the Auxiliary Cooling Output Mask.

Once energized, the auxiliary cooling output remains on until zone temperature falls below the Active Cooling Setpoint and the cooling requirement falls below 100% by an amount given by the Auxiliary Hysteresis.

Heating Outputs

The Air Conditioning personalities provide heating by energizing one or two stages of electric or gas heat. An Auxiliary Heating output can be used to bring on additional cooling if the Zone Temperature Heating Setpoint can not be maintained.

Heat 1 Output (AC)

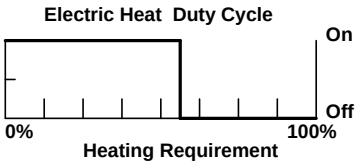

1 Stage Heat at ~56% HTG

Air conditioning personalities have up to 2 stages of Heating output. The Heat 1 output is always on Output-4. Heat operation is interlocked to the fan being ON, unless Gas Heat Enable is Set. In the Heating Mode, Heat 1 Output is on a fraction of the Heating Base Time based on Heating Requirement.

For 1 stage of heat (Personality 1 & 3), The Heat 1 On Time goes from 0 to 100% of the Heating Base Time as the Heating Requirement goes from 0 to 100%.

For 2 stages of heat (Personality 2 & 4), Stage 1 duty cycles in proportion to the Heat Base Time from 0 to 100% as the Heating Requirement goes from 0 to 50%.

Stage 2 does not turn ON until stage 1 is on for 100% of the duty cycle time and duty cycles in proportion to the Heat Base Time from 0 to 100% as the Heating Requirement goes from 50% to 100%.

Heat 2 Output (AC)

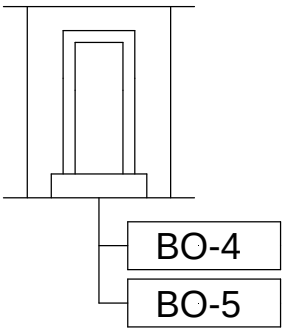

The Heat 2 Output to be controlled is identified by the Heat 2 Mask, which is typically on Output-5.

Two Stage Heating. For a controller with 2 stages of heat (Personality 2 & 4), Stage 2 does not turn ON until stage 1 is on for 100%.

The Heat 2 On Time goes from 0 to 100% of the Heating Base Time as the Heating Requirement goes from 50% to 100%. Heat 1 remains on so long as Heat 2 is on.

.

Auxiliary Heating Output (Optional)

An optional Auxiliary Heating Output is provided. If Auxiliary Heating Enable is Yes in the Heating Mode, and the Heating Requirement is 100 % and the zone temperature is less than the active Heating setpoint by an Auxiliary Temperature Offset, typically 2 degrees, for a Auxiliary Delay Time, typically 120 s, then an auxiliary Heating output is energized. The output to be controlled is identified by the Auxiliary Heating Output Mask .

Once energized, the Auxiliary Heating Output remains on until zone temperature rises above the Active Heating Setpoint and the Heating requirement falls below 100% by an amount given by the Auxiliary Hysteresis.

Heating and Cooling Lockouts

The compressors can be locked out conditionally based on the following: Cooling Lockout or OAT Cooling Lockout Enable; Emergency Modes, EM1 or EM2; Compressor Fault Lockout Enable, = Yes and Compressor Lockout Alarm; Water Loop Compressor Disable = Yes and Water Loop Alarm; or DAT Compressor Disable = Yes and DAT Alarm.

The Compressors, Auxiliary Cooling, Heat 1, Heat 2 and Auxiliary Heating are shed when the Active Demand Level is equal or exceeds the Demand Shed Level or the Demand Rotate Level for the matching Demand Group.

It is possible to lockout Heating or Cooling either completely or when the outdoor temperature reaches some Outdoor Air Temperature Lockout Setpoint. The heating and cooling calculations and modes function normally even if lockouts are enabled.

If Lockout Heating is enabled then all heating outputs are locked out when the controller is in the heating mode.

If OAT Heating Lockout is enabled and the Outdoor Air Temperature on Input 5 is greater than the OAT HTG Lockout Setpoint, then all heating outputs are locked out when the controller is in the heating mode.

If Lockout Cooling is enabled, then the compressor cooling and auxiliary cooling outputs are locked out when the controller is in the cooling mode.

If OAT Cooling Lockout is enabled and the Outdoor Air Temperature on Input 5 is less than the OAT CLG Lockout Setpoint, then the compressor cooling and auxiliary cooling outputs are locked out when the controller is in the cooling mode.

Emergency Modes

Two emergency modes, Emergency 1, and Emergency 2, are overrides that are received over the communication line and remain in effect until cleared over the communication line. Emergency modes are maintained through loss of power.

While in Emergency 1 state the controller immediately turns ON the fan, turns ON the lighting output, and turns OFF any other outputs (including electric heat). No other state may be entered until Emergency 1 has been cleared via the communications line.

If in Emergency 2, no other state except Emergency 1 may be entered until Emergency 2 has been cleared via the communications line. While in Emergency 2 state the controller immediately turns OFF the fan, turns ON the lighting output, and turns OFF any other outputs (including electric heat).

Economizer

An outdoor economizer may be used as the first stage of cooling. The ASIC/1-8655 supports one of four Economizer Types: On-Off, Modulating, Mixed Air , or Discharge Air.

The On-Off Economizer uses the Economizer Open mask and is typically assigned to output 6.

The Modulating, Mixed Air , or Discharge Air. Economizes can use either Tri-State or Analog Outputs. The Tri-State Economizer uses the Economizer Open and Closed Output Masks and are typically assigned to outputs 6 & 7. The Analog Economizer can be assigned to Analog Output 1 or 2.

On-Off Economizer- Type 1

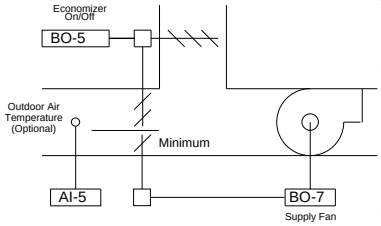

When the Fan is on, the On-Off outdoor damper is energized when the conditions are suitable for free cooling. If the Economizer Type is 1, On-Off Economizer, then the On-Off economizer opens a damper based on the Outside Air Temperature, OAT.

In the Heating mode, or Deadband entered from Heating, and when the fan is On, the Economizer Output is off. In Cooling mode, or in Deadband entered from Cooling, when the fan is On and Economizer Low Limit Temp SP < OAT and OAT < Economizer Temperature SP, then economizer output is On.

When the fan is On and OAT < Economizer Low Limit Temp SP or OAT > Economizer Temperature SP, then Economizer output is off. If the Outdoor Air Temperature Sensor is in fault, then the economizer output is Off.

Modulating Economizer - Type 2

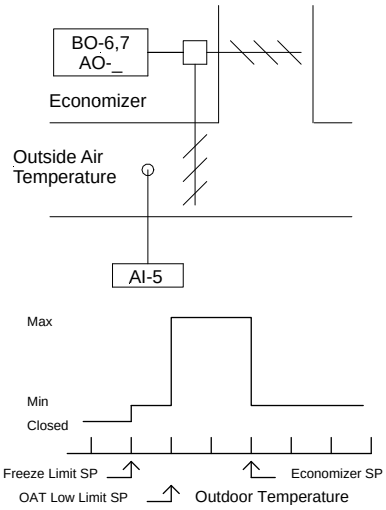

If the Economizer Type is 2, Modulating Economizer, the Modulating Economizer controls the position of a damper based on the Control State, Outside Air Temperature, OAT, and the cooling calculation. The Modulating Economizer does not require a Mixed Air or Discharge Air Temperature Sensor.

In the Cooling Mode when the fan is ON , the modulating economizer is available based on the Outside Air Temperature, OAT. The Economizer is available when the fan is on and the Economizer Low Limit Temp SP < OAT < Economizer Temperature SP.

When available the economizer is first stage of cooling and locks out other cooling when the cooling calculation is < 25% . The Economizer Cooling Requirement is modulated from Econ Min Position SP to Max Position SP as the Primary Cooling Calculation goes from 0% to 25%

When the fan is off, the economizer drives to the Economizer Closed Position.

When the fan is On and Economizer Low Limit Temp SP < OAT and OAT < Economizer SP, then Economizer output modulates between the Economizer Maximum Position and Economizer Maximum Position.

When the fan is On and Economizer OAT < Economizer Low Limit Temp SP or OAT > Economizer SP, then Economizer output is at Economizer Minimum Position.

When the fan is On and Economizer OAT < Economizer Freeze Limit SP, then the economizer output is closed. If the Outdoor Air Temperature Sensor is in fault and not overridden, then the economizer output is closed.

Mixed Air Economizer - Type 3

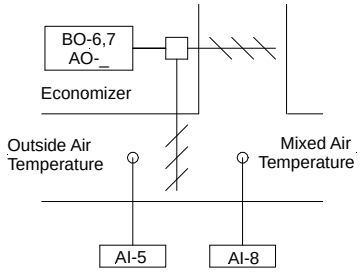

The Mixed Air Economizer is Type 3. The Mixed Air Temperature on Input 8 is used to modulate the Economizer Damper when free cooling is available. The damper is modulated to control the Mixed Air Temperature to the Mixed Air Temperature Setpoint.

The Mixed Air Economizer sequence is identical to the Modulating Economizer sequence except for the way in which the Economizer Cooling Requirement is calculated. This means that if the Economizer is available, the mechanical cooling will be locked out for the first 25% of the Primary Calculation.

April 2010

Discharge Air Economizer - Type 4

A Discharge Air Economizer sequence, Type 4, controls the economizer damper based on the Discharge Air Temperature on Input 6 to meet the Discharge Air Temperature Setpoint . When economizer cooling is available, and the controller enters Cooling from Deadband, the Compressor Cooling (and Aux Cooling) are locked out.

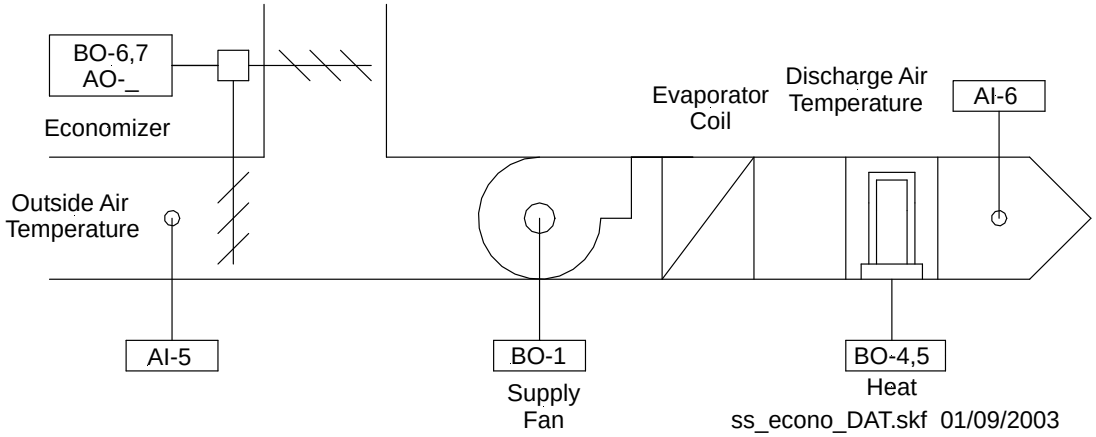

Economizer Cooling

Economizer cooling is available when the fan is on and the Outdoor Air Temperature on Input 5 is less than the Economizer Temperature Setpoint and greater than the Economizer Low Limit Temperature.

When the Active Control Mode enters Cooling from Deadband and Economizer Type is 4 and economizer cooling is available, then the Compressor Cooling and Aux Cooling are locked out.

Economizer Minimum

If economizer cooling is not able to maintain the Zone Temperature at the Active Cooling Temperature Setpoint for a period of time then economizer cooling is locked out and Compressor Cooling (and Aux Cooling) is enabled until the zone returns to Deadband.

If the Zone Temperature exceeds the Active Cooling Setpoint by a Zone Offset Temp for a Zone Offset Time, and the Cooling Requirement is 100%, then Economizer cooling is disabled moving the Economizer Dampers to Minimum Position, and the Compressor and Aux Cooling are active until the Active Control Mode re-enters Deadband.

If the Economizer is not available, because the Outside Air Temperature is greater than the Economizer Setpoint, or below the Economizer Low Limit Temperature Setpoint, then the Compressor is available. The Economizer Cooling Requirement is set to the Economizer Minimum Position SP.

The Economized Damper is modulated to control the Discharge Air Temperature on Input 6 to the Discharge Air Temperature Setpoint. If the Discharge Air Temperature sensor is in fault, then it controls to Minimum Damper Position.

Economizer Closed

When the fan is ON and if the Outdoor Air Temperature is less than the Economizer Freeze Limit Temperature, OAT < Economizer Freeze Limit Temp SP, then the Economizer is Closed.

When the fan is off, the Economizer Cooling Requirement is set to the Economizer Closed Position.

If the Outdoor Air Temperature Sensor is in fault and not overridden, the Economizer Cooling Requirement is set to the Economizer Closed Position.

If the Control State is Unoccupied or Night Setback, and the Control State is Heating or Deadband entered from Heating, the Economizer is in the Closed Position.

If the Discharge Air Temperature Sensor is in fault, the Economizer Cooling Requirement is set to the Economizer Closed Position.

Ventilation Demand Control

Normal outside air CO2 is about 350 to 400 ppm. The CO2 level responds to building occupancy. A CO2 level of 700 ppm above outside air represents a ventilation rate of about 15 cfm/person in a typical office environment; 500 ppm above outside air represents about 20 cfm/person.

The actual ventilation rate cfm/person depends on the number of persons in the space, the metabolic activity level, and the number of air changes per hour based on ventilation of the space, and on any other sources of CO2 such as combustion..

Ventilation is an override to the economizer damper position to make sure that sufficient ventilation air is available.

If CO2 Ventilation Enable is Yes, then a Ventilation Minimum Position is calculated based on the CO2 level 0-2000 ppm as measured on a sensor on Input 4, compared to a CO2 Setpoint.

When the fan is on, if CO2 Ventilation Enable is Yes, then the Economizer Cooling Requirement is compared with the Ventilation Minimum Position, and the larger value is used.

Other Outputs

Analog Outputs

The ASIC/1-8655 has two 0 to 10 Vdc at 20 mA Analog outputs. The outputs can be assigned to Cooling Requirement, Heating Requirement, or Economizer Requirement, or Changeover Heating/Cooling. Because some actuators are 6 to 9 V and others are 2 to 10 Vdc, the analog outputs can be scaled from Minimum Output (Fully Closed) to Maximum Output (Fully Open) as the control signal goes from 0 to 100%.

In Changeover Heating/Cooling the analog output follows the Cooling Requirement, but if the Changeover status is ON, then the analog output follows the Heating Requirement. The Changeover status is set by a command on the communication line, or by comparing the Water Loop Temperature with the Changeover Setpoint.

Auxiliary 1, 2 Output (Optional)

The ASIC/1-8655 allows up to 2 outputs for auxiliary outputs that do not follow any schedule. They can be overridden On or Off, and remain in the last state commanded. The outputs to be controlled are identified by the Auxiliary 1 Output Mask and Auxiliary 2 Output Mask [Default: None]. On power reset the Auxiliary 1 & 2 Outputs are off.

Lighting Output (Optional)

Each ASIC/1 has the ability to control lighting. The Lighting schedule will automatically turn the lights on and off. By equipping the ASIC/1 with a WS-0XX wall sensor with push button override, the lights can be operated manually by the occupant during Occupied and Morning Ready States by pressing the button on the side of the zone sensor without affecting HVAC operation.

During Unoccupied and Night Setback States, depressing the push button will return the control to Occupied, and the lights will come on and stay on for Afterhours Time Allowed. During Emergency 1 and Emergency 2, the push-button has no effect.

If Lights Reverse Enable is set, the output identified by the Lights Output Mask is reversed. When the lights are on, the physical output is OFF. When the lights are off, the physical output is ON. The output status, and Output Status - Lights are unchanged.

Blink Warning: One minute before automatic shut off of lights as designated in the daily event schedule, or at the end of the afterhours override period, the lights will blink off and back on again. Pressing the afterhours button will re-start the lights.

Output Overrides

The ability to override outputs, either by function or by output number, has been provided in the controller for testing purposes only. However these overridden outputs may interfere with normal sequence operation.

CAUTION: DO NOT USE output overrides to control the sequence as equipment damage could result. Overrides are for brief testing ONLY.

Alarms

Alarm 1- Zone Temperature

The zone temperature is compared with Active Heating or Cooling Setpoints. If the zone temperature is above the Active Cooling Temperature Setpoint by the Zone Temperature Alarm Range, a High Zone Temperature Alarm is set. If the Zone temperature is below the Active Heating Temperature Setpoint by the Zone Temperature Alarm Range, a Low Zone Temperature Alarm is set. No other actions are taken in response to a zone temperature alarm.

Alarm 2 - DAT

If the discharge air temperature raises above the DAT High Limit Setpoint, a high DAT high limit alarm is set. If the setpoint is 0, this alarm is ignored. If the discharge air temperature falls below the DAT Low Limit Setpoint, a DAT Low Limit Alarm is set. If the setpoint is zero, this alarm is ignored. Once a DAT Alarm is set, the temperature must recover by the DAT Alarm Hysteresis before the alarm is cleared.

A DAT Compressor Disable option is included. If the DAT Compressor Disable is Yes, then the Low Discharge Air Temperature Alarm disables the compressor. A High Discharge Alarm does not disable the compressor.

Alarm 4 - Compressor Alarms

Alarm 4 is used to monitor the status of the compressor alarms. Alarm 4 LO indicates the presence of a compressor fault. Alarm 4 HI indicates the presence of a Compressor Lockout.

Alarm 4 - Compressor Fault (LO)

The status of the Compressor Fault contacts across input 6 are monitored when compressor 1 or 2 is ON and when Compressor Fault Enable is Yes. If a Low Input 6 Fault is detected for a Compressor Fault Delay [Default 20 s] , then the control will

1) set Alarm 4, LO, Compressor Fault
2) turn off the Compressor on Compressor Fault Alarm.
3) Increment the Compressor Fault Counter

4) wait for a Compressor Retry Wait, and then
5) try again

If the Compressor fault is still in place at the end of the Compressor Retry Timer, it does not clear the fault alarm and does not re-enable the compressor until the fault clears.

Alarm 4 - Compressor Lockout (HI)

If Compressor Fault Lockout is enabled when the Compressor Fault Alarm appears, the controller will

1) turn off the Compressor on Compressor Fault Alarm.
2) Increment the Compressor Fault Counter
3) wait for a Compressor Retry Wait, and then
4) try again incrementing the Compressor Try Counter

If another Compressor Fault Alarm occurs before the end of the Compressor Minimum On Time another attempt is made to Start the compressor, as described above, until the maximum allowed tries, Compressor Try Max [Default, 3] has been exceeded. If the Compressor runs successfully for the Compressor Minimum On Time, the Compressor Try Counter is cleared.

When the Compressor Try Counter exceeds the Compressor Try Max [Default, 3], then a Compressor Lockout Alarm is set and no further attempt is made to start the compressor until cleared only by a communication Clear Lockout message, (MT=0x10, M1=14), or resetting power to the unit.

Alarm 5 - Proof of Fan Alarms

A Proof of Fan Switch across Input 7 (Water loop) Opens on proof of fan. If Proof of Fan Enable is Yes, the switch is examined whenever the fan, or high fan is on, or in Heating with Gas Heat Enable = Yes.

Proof of Fan Status is set when proof of fan established. A Proof of Fan Alarm is set on start when proof of fan fails after a Proof of Fan Delay, or once the fan is running if proof of fan is lost for a Proof of Fan Delay.

Note: The Proof of Fan Alarm is for indication only. No control action results from the proof of fan alarm.

Communications

The ASIC/1-8655 communicates at 1200 baud, 9600 baud, or 19,200 baud on the remote bus using RS-485 twisted pair communication wire, connected to remote screw terminal connector, TB-6. Access to the ASI communication bus is through a SINC/3-3000 system interface or ASIC/2 controller which can also be used to broadcast time to synchronize the network of ASIC/1 controllers.

Communication with the remote bus can also be established through the WS-0XX wall sensor using a SINC/1-1030 Portable Interface connected to a lap-top computer running ASI Expert Software.

Each controller has a unique 16 bit Device address, and has a separate 8 bit group address.

The Device Global Address allows for global downloads of parameters and setpoints to all controllers of a particular type, without affecting other controllers which may use the same parameter location for a different purpose. The following Global Addresses are defined for the ASIC/1-8655 controllers.

- Address 23,061 (0x5A65) ASIC/1-8655 Roof Top Controller (655A..)
- Address 23,125 (0x5A55) All ASIC/1-8x55 Controllers
- Address 23,130 (0x5A5A) All ASIC/1 terminal unit controllers

System Component Checklist

Inputs

Description	Part Number	Quantity
Optional Outdoor Air Temperature Sensor (IN-05)	TS-O	0,1
Optional Discharge Air Temperature Sensor (IN-06)	TS-D-8	0,1
Optional Auxiliary Temperature Sensor (IN-07)	TS-I-4, or TS-S	0,1
Optional Auxiliary/Mixed Air Sensor (IN-08)	TS-D-8	0,1
Wall Mounted Zone Temperature Sensor	WS-0XX	1
Sensor Cable	SCP-0XX	1
Communication Cable twisted pair.	22-24 ga twisted	
ASIC/1-8655 Enclosure Cover Kit	CE-8655	0,1

NOTE: Consult ASIC/1-8655 Installation manual for configuration of inputs.

Outputs

Description	Part Number	Quantity
Packaged AC Controller	ASIC/1-8655	1
24 Vac Transformer		1
24 Vac Fan Control Relay with line voltage contacts		1,2
24 Vac Compressor Relay with line voltage contacts		0,1,2,
24 Vac Electric Heat Relay with line voltage contacts		0,1,2,
Economizer Damper with 24 Vac Tri-state Operator		0,1
Economizer Damper with 0-10 Vdc Analog Operator		0,1
24 Vac Auxiliary CLG Output Relay (Optional)		0,1
24 Vac Auxiliary HTG Output Relay(Optional)		0,1
24 Vac Auxiliary Output Relay (Optional)		0,1,2,
24 Vac Lighting Relay (Optional)		0,1

NOTE: The ASIC/1-8655 must be connected to a solid building ground.

Wiring Layout

Typical Packaged AC Unit with 4Stages of Air Conditioning and 2 Stages of Heat. (FW655A1.5)

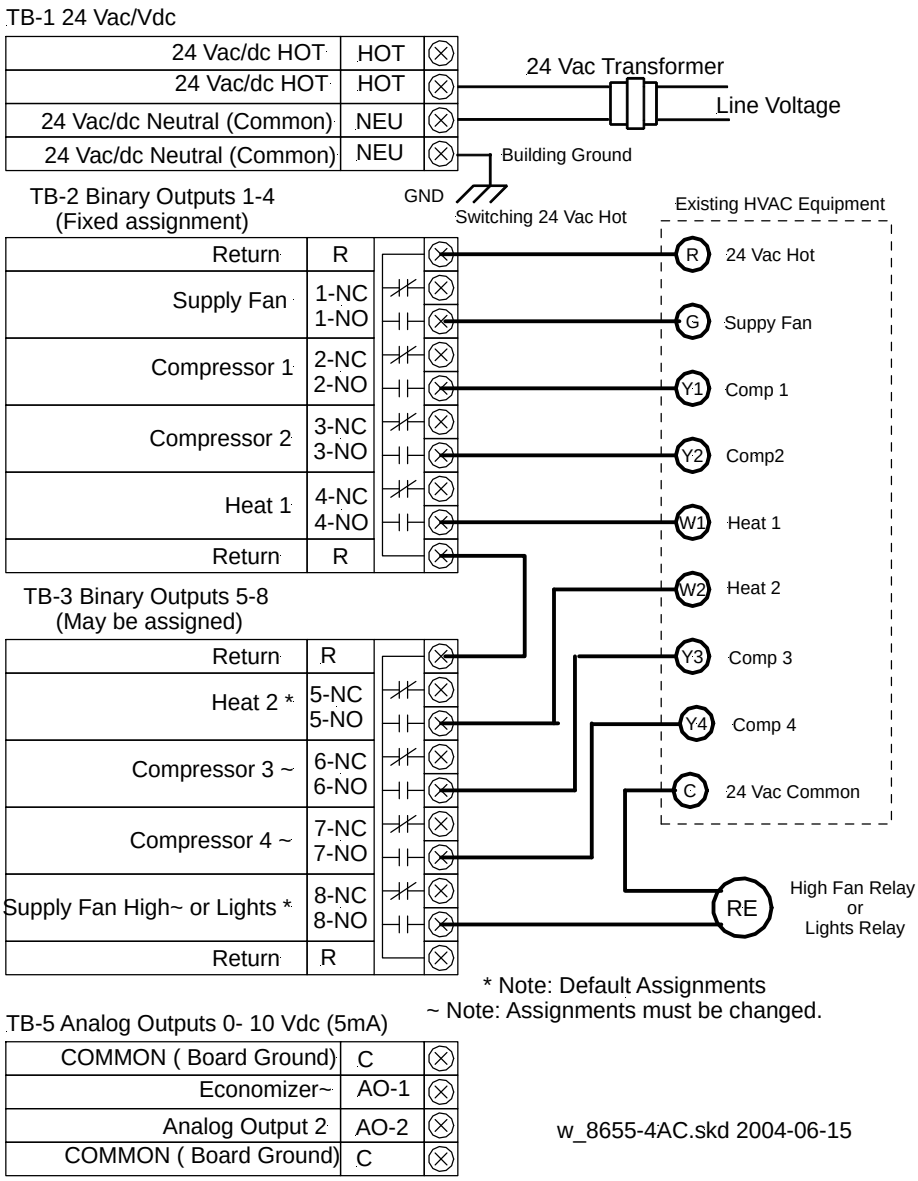

April 2010
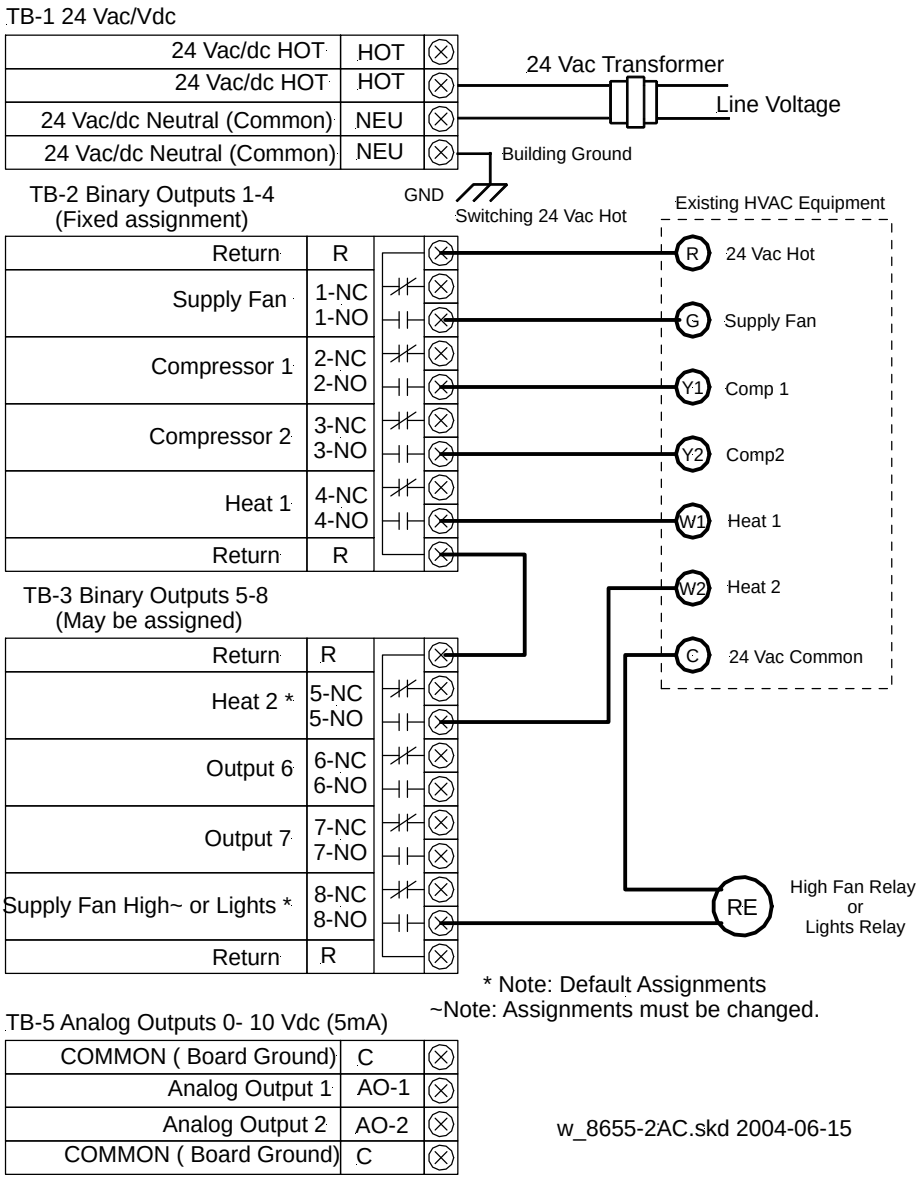
Typical Packaged AC Unit with 2 Stages of Air Conditioning and 2 Stages of Heat.